INSTALLATION MANUAL:

COR-4209005

Jeep Wrangler Skid Plate System
Jeep JL 2.0L V6 2018-2024+ “Skinny Tank”

CLAYTON
OFF ROAD

DISCLAIMER

WARNING:

Suspension systems and their components are designed to enhance your vehicle's off-road performance. This may cause your vehicle to handle differently, on and off-road. Always wear your seatbelt and take extra care when driving a modified vehicle. Failure to do so can result in loss of control which may result in a rollover causing serious injury, or even death to the driver and/or passengers of the vehicle. Regular maintenance and consistent inspections are required to keep your modified vehicle safe and functioning properly. These suspension systems and any components should be installed by certified technicians only. Attempts to install these products without proper knowledge can lead to poor performance, or possible failure, which may jeopardize the safety of the vehicle and its passengers. The installer is responsible for proper installation ensuring a safe and properly functioning vehicle. Take extra care when operating a modified vehicle and thoroughly inspect your vehicle before and after every off-road use.

Read the instruction set in its entirety before attempting the installation.

NOTE:

This product may require general welding, fabrication, and automotive mechanic skills. Welding should only be done by a competent welder. Clayton Off Road implies no guarantees or warranties and is not liable for improper installation. Some grinding and fitment may be required when installing this product. Every vehicle varies slightly, and some fabrication and/or modification may be required.

ATTENTION:

It is the customer's responsibility to thoroughly inspect all received parts to ensure they are assembled correctly and fully welded. Please carefully examine all weld seams and verify that bolt-through holes are properly aligned. Some Clayton Off Road products are permanent, non-removable, weld-on solutions. **If a defect or issue is found after installation, especially with permanent weld-on components, it may be difficult or impossible to correct.** Inspecting the part(s) received beforehand helps prevent unnecessary and avoidable complications.

All Clayton Off Road products are engineered and tested on U.S. spec, left-hand drive vehicles. Compatibility with right-hand drive vehicles is not guaranteed. Customer verification is highly recommended to ensure proper fitment prior to purchase.

ATTENTION: TORQUE SPECIFICATION

When working on any vehicle, it is good practice to torque suspension/weight-bearing components while the vehicle is resting under its load. This instruction set, as well as any other Clayton Off Road instruction set, assumes the installer will tighten any suspension-related components properly, to the recommended torque specification, when the vehicle is resting safely under its own weight.

ATTENTION!

Clayton Off Road offers two different gas tank skid plates for the JL 3.6L/2.0L, depending on the build date of the vehicle.

From our research, Jeep had redesigned the gas tank to provide additional clearance near the rear differential.
Vehicles with build dates before September 04, 2018, will use our gas tank skid plate COR-4209500
Vehicles with build dates after September 04, 2018, will use our gas tank skid plate COR-4209502

The following photos display the OEM gas tank skid before and after this rolling change. Use the photos to confirm which gas tank you have in order to determine which Clayton Off Road gas tank skid you will purchase.

DO NOT RELY ON THE DATE/YEAR CATEGORIZATION. CROSS-REFERENCE WITH YOUR OWN VEHICLE TO CONFIRM!

PRE- SEPTEMBER 04 2018

USE GAS TANK SKID PLATE
COR-4209500

POST- SEPTEMBER 04 2018

USE GAS TANK SKID PLATE
COR-4209502

ATTENTION!

To ensure proper fitment, it's important to identify the motor mount configuration on your vehicle before ordering. Motor mounts can vary significantly by year and model, so each configuration requires its own specifically designed brackets. These brackets are **not** universal—each hardware option is engineered to work with the motor mount bracket welded to your vehicle's frame.

We're **always** happy to help! If you're unsure which motor mount configuration you have or unsure on which gas tank skid to order, please email **customerservice@claytonoffroad.com** with a few clear photos of your motor mounts/gas tank, and our team will gladly assist you in selecting the correct hardware kit.

Please note: if an incorrect hardware kit is ordered and painted, it cannot be returned. If you plan to paint your skid plate system or brackets, we strongly recommend test-fitting the unpainted brackets first to confirm proper fitment before painting.

INCLUDED ITEMS

4209005 – Jeep Wrangler Skid Plate System (2.0L I4 JL, 2018-2024+)		
QTY	Part Number	Description
1	4209121	Engine Skid Plate (2.0L 2018-2024+ JL/JT)
1	4209115	Engine Skid Plate Hardware (2.0L 2018-2024+, JL)
1	4209320	T-Case Skid Plate (3.6L/2.0L/6.4L 2018-2024+, JL/JT)
1	4209310	T-Case Skid Plate Hardware (3.6L/2.0L/6.4L 2018-2024+, JL/JT)
1	4209522	Gas Tank Skid Plate – Skinny Tank (3.6L/2.0L/6.4L 2018-2024+, JL)
1	4209510	Gas Tank Skid Plate Hardware (3.6L/2.0L/6.4L 2018-2024+, JL)
1	4209700	Skid Support Member (3.6L/2.0L/6.4L 2018+, JL/JT)
1	4209900	Skid Connection Brackets – Set of 3 (3.6L/2.0L/6.4L 2018+, JL/JT)

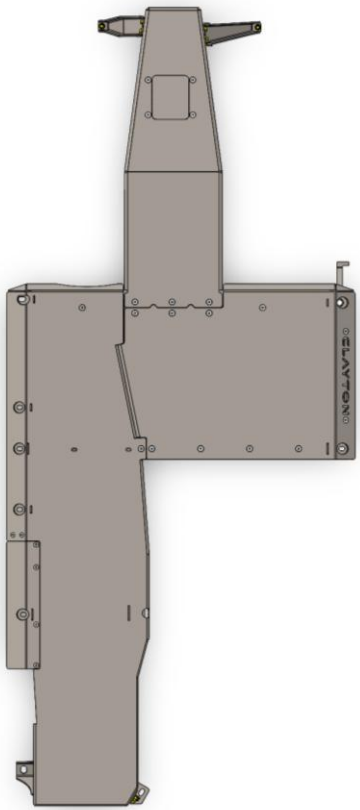

Skid System Notes and Features:

- Combination of 1/4” and 3/16” thick steel construction engineered using advanced CAD software and modern manufacturing techniques.
- Shields the JL underbelly and exhaust crossover pipe from high-rise obstructions during extreme off-road driving scenarios
- OEM-compatible, bolt-on design with secure mounting points to withstand impact
- Countersunk hardware where it matters prevents unnecessary wear and tear
- Allows easy access to the oil drain plug, providing a serviceable and protective solution to the otherwise exposed critical area
- No exhaust modification required
- Minor drilling required

Note: Removal of the OEM gas tank skid plate is required for this installation.

INSTALLATION INSTRUCTIONS

TOOLS REQUIRED FOR INSTALLATION

- *Basic hand tools* — *Impact and driver drill, flathead screwdriver, 17/32" drill bit*
- *Hex key set,* — *3/16, 7/16"*
- *Metric wrench/socket set,* — *7, 13, 18mm*
- *Standard wrench/socket set,* — *9/16, 3/4"*
- *Adjustable long travel jack stand*
- *Vehicle lift*

*****Take this product to a licensed professional if you are hesitant about the installation process!*****

1. Begin by safely parking the vehicle on a shop lift. It is recommended that this installation be performed on a 4-post lift; however, it can be done on a 2-post lift with additional care. Figure 1 below shows the vehicle set up and ready to be raised to a safe working height. **The new skid system is heavy, so recruit a friend or use adjustable long-travel jack stands to aid you in the installation.**

Figure 1: Jeep JL ready for installation

INSTALLATION INSTRUCTIONS

2. With the vehicle raised into the air, remove the OEM engine skid and transfer case guard that straps under the OEM gas tank skid plate. Use the diagram below to locate which bolts to remove. Put all hardware aside, as most of the bolts will be reused. **Note that if you have already installed our Front Long Arm Kit for JL/JT, the OEM engine skid will not be present.**

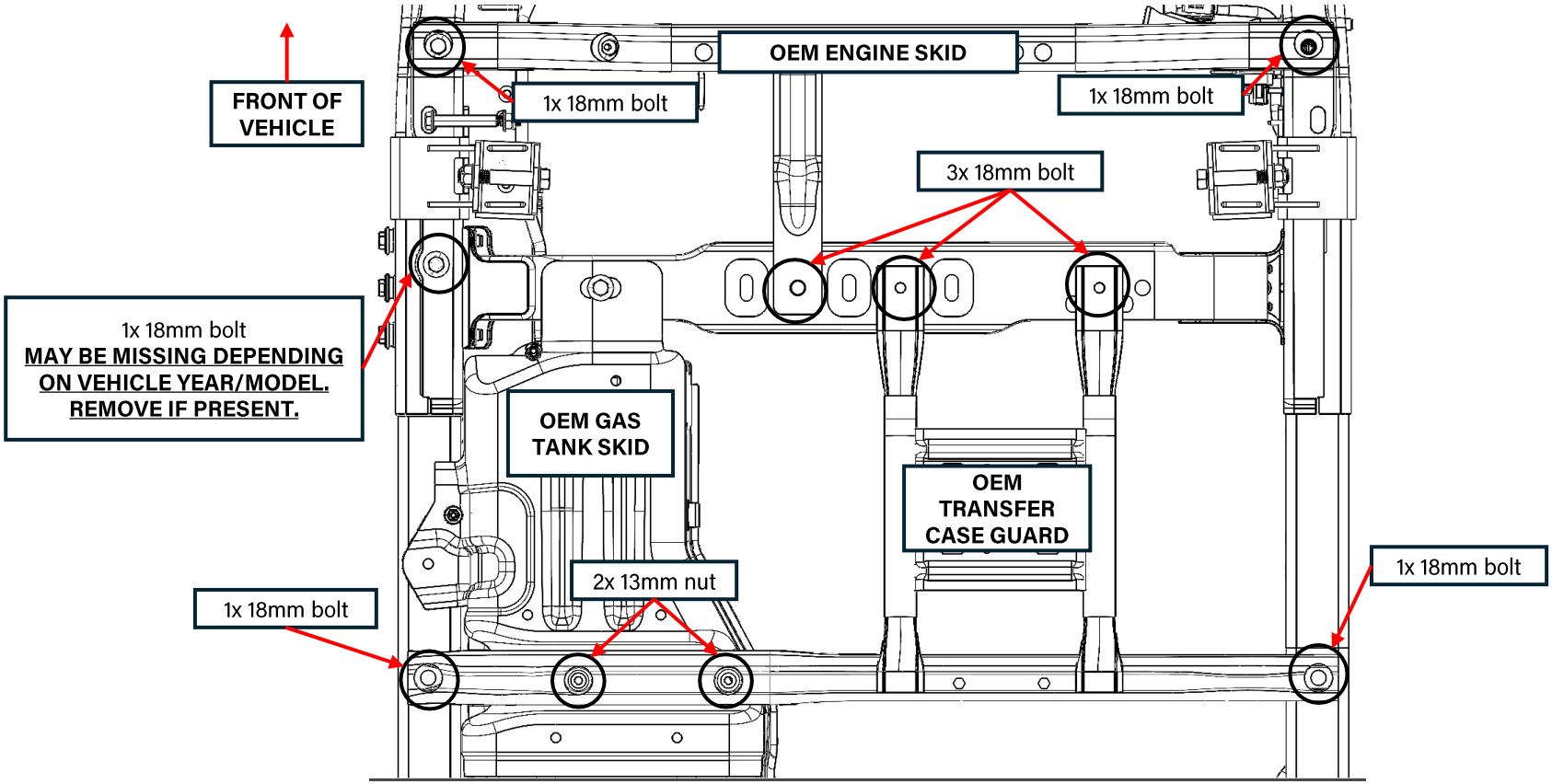

Figure 2: Underside view of OEM gas tank skid plate, transfer case guard, engine skid plate, and cross member with bolt locations to remove

INSTALLATION INSTRUCTIONS

3. Remove the plastic fuel line guard as seen in the figure below. Use a 10mm socket to remove the x2 nuts. Note that you will be able to reinstall this plastic shield once the installation is completed. **If you are installing this skid system on a vehicle that already has the COR long arm kit installed, this plastic shield will not be present.**

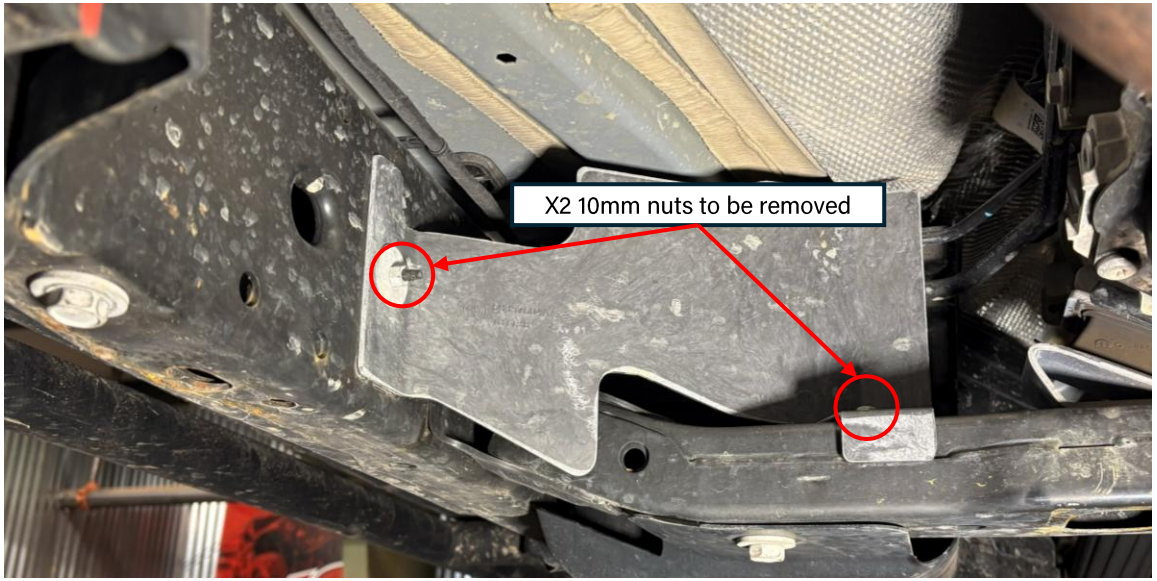

Figure 3: Plastic fuel line guard to be removed temporarily

INSTALLATION INSTRUCTIONS

4. Remove the x2 13mm long bolts from the exhaust hanger that is mounted on the vehicle's cross-member. This is to gain access to the slot in the top of the cross member for later access. **Put these two bolts aside for later.**

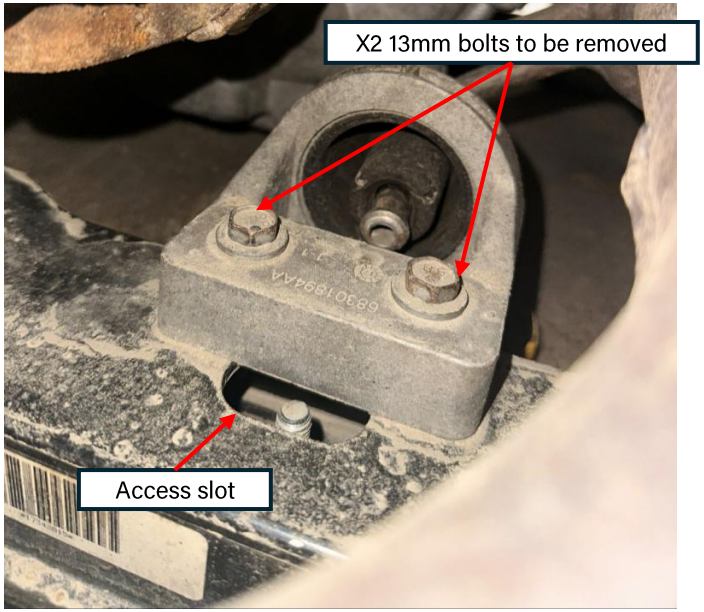

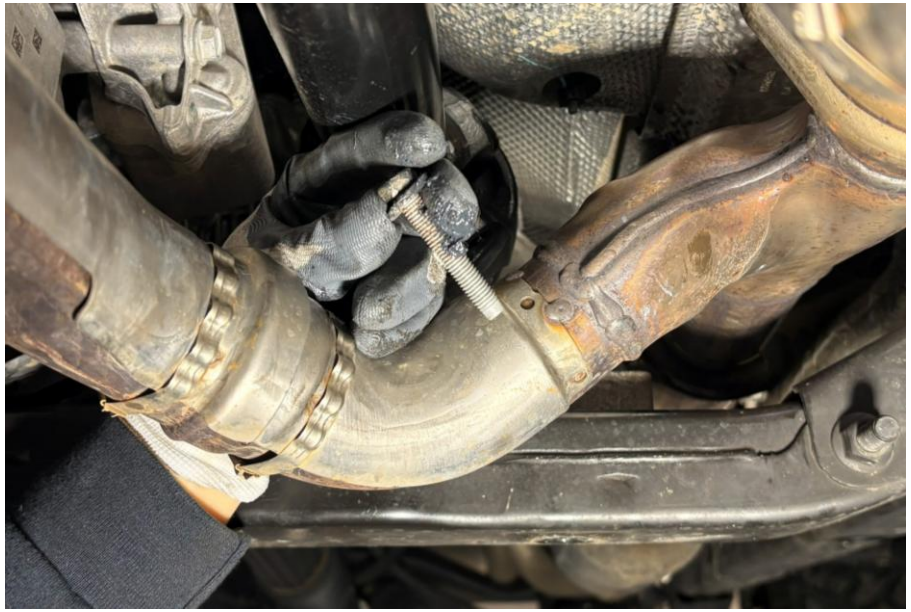

Figure 4: Exhaust hanger bolts (x2) to be removed temporarily

Note: The exhaust hanger on your vehicle may vary. Ultimately, access is necessary on the inside of the cross member through a slot in the top of the member, so temporary removal of this bracket is required.

INSTALLATION INSTRUCTIONS

5. It is now time to begin the gas tank removal process. **It is highly recommended that the gas tank be less than ¼" full before removing it from under the vehicle.** This will greatly ease the installation process.

Support the gas tank with the use of x2 tall, adjustable jack stands. This will greatly aid you the installation process, as the tank will need to slowly be dropped once the bolts are loosened in order to access all of the tank connections. Using adjustable stands (or something similar to allow adjustability) will slow down the removal process, which will allow you to take your time and carefully disconnect the tank connections.

Figure 5: Gas tank supported with adjustable jack stands

INSTALLATION INSTRUCTIONS

6. With the tank supported, begin **loosening** the 7 bolts fastening the OEM tank skid to the vehicles undercarriage. Use an 18mm socket and go around loosening the bolts. **Do not fully remove the bolts yet. Leave a couple of threads engaged.**

Follow the photos below to remove the bolts holding the tank in place. You'll find 3 bolts on the frame rail (a, b, c), 2 on the side closest to the driveshaft (d, e), and 1 on the front cross member (f), and 1 on the back right of the tank (g). 7 bolts total.

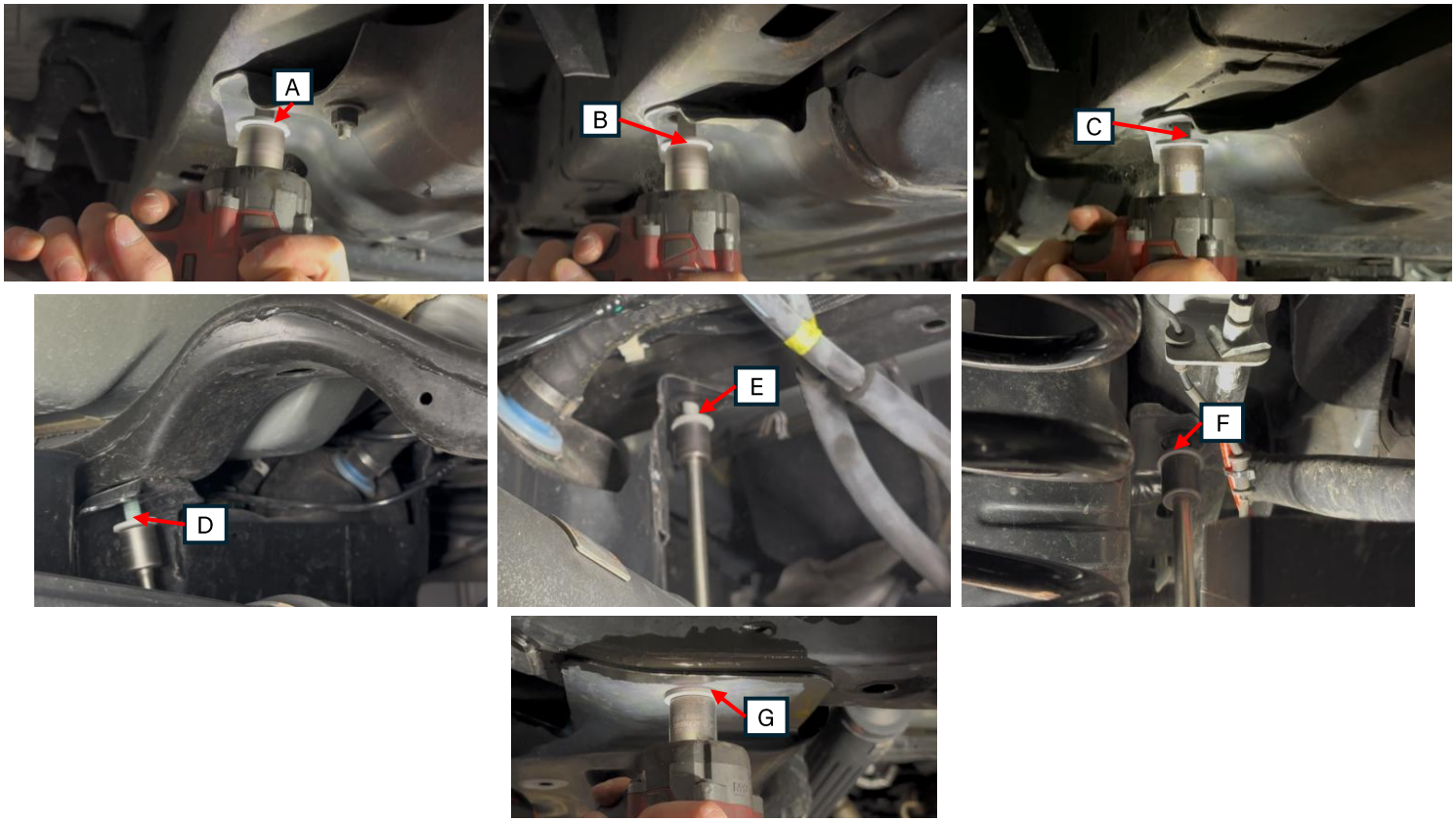

INSTALLATION INSTRUCTIONS

7. Slowly lower the jack stands to as much as the bolts will allow. Continue to support the tank and access the top of the tank to disconnect the lines shown below.

Remove the evap canister hose by removing the large green plastic clip on the top of the tank. Then push down on the back spring clip to release, and gently pull the hose off of the connection.

Next, gently push down on the electronic wiring harness located directly behind the evap canister hose. This may require the tank to be lowered further to gain additional clearance. **Be mindful of any retaining clips, remove them with a trim tool.**

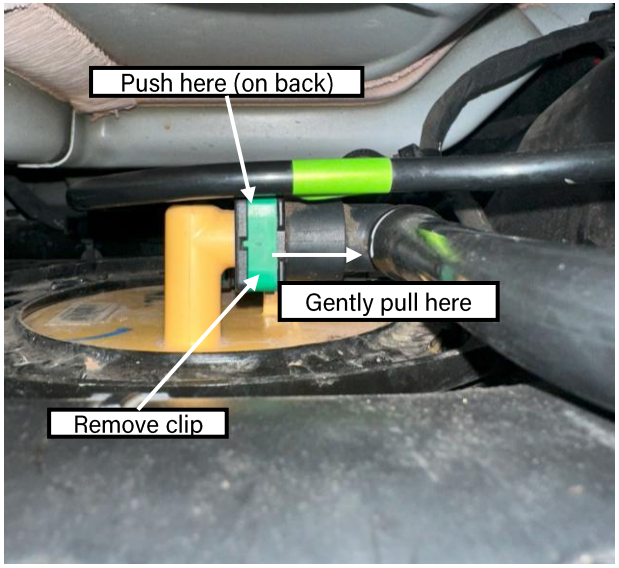

Figure 6: Evap canister hose

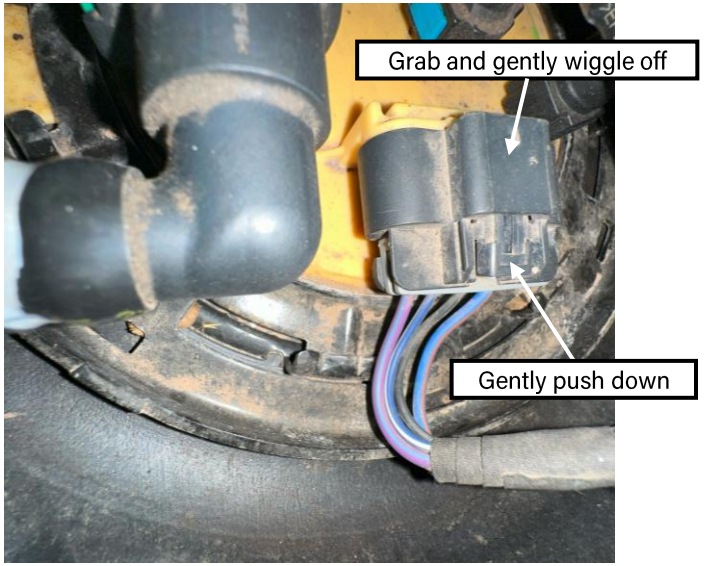

Figure 7: wiring harness

Note: RETAIN ALL PLASTIC FUEL CONNECTION CLIPS

INSTALLATION INSTRUCTIONS

8. Keep the tank supported and access the rear of the tank. Follow the steps below to make the necessary disconnections.

- Loosen the filler neck clamp and slip it off the tube using a 7mm socket (Figure 8)
- Remove the filler breather by removing the blue, plastic retaining clip and gently pushing down on the spring on the back of the connection (Figure 9)
- Remove the vapor system hose clip by removing the red, plastic retaining clip and gently pushing down on the spring on the back of the connection (Figure 10)

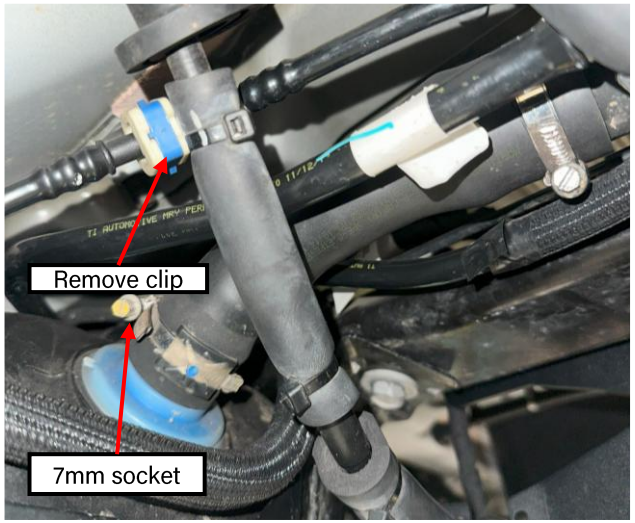

Figure 8: filler neck clamp

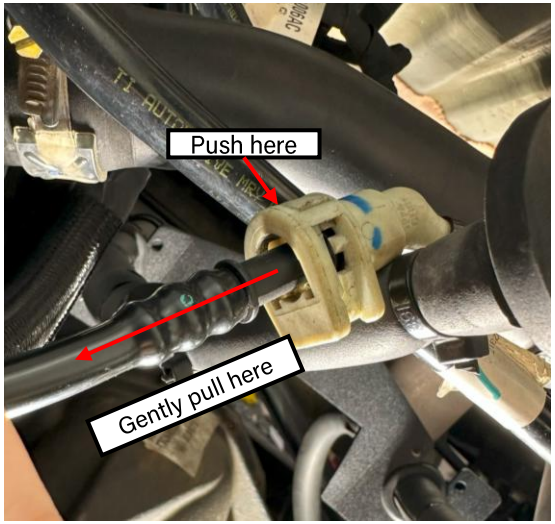

Figure 9: Filler breather connection

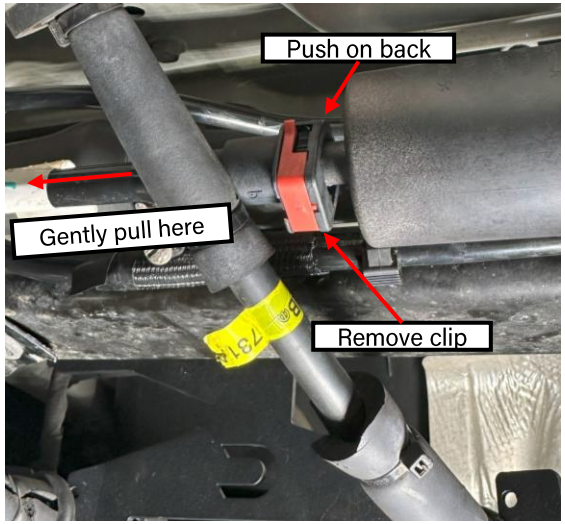

Figure 10: Vapor system hose clip

Note: RETAIN ALL PLASTIC FUEL CONNECTION CLIPS

INSTALLATION INSTRUCTIONS

9. Keep the tank supported and access the front of the tank. Follow the steps below to make the necessary disconnections.

- Remove the send fuel line by removing the red, plastic retaining clip and gently pushing down on the spring on the back of the connection. **THIS LINE IS PRESSURIZED. ENSURE THE VEHICLE IS COLD BEFORE DISCONNECTING, AND HAVE PLENTY OF RAGS AVALIBLE FOR FUEL CLEANUP**
- Remove the return fuel line by removing the red, plastic retaining clip and gently pushing down on the spring on the back of the connection.

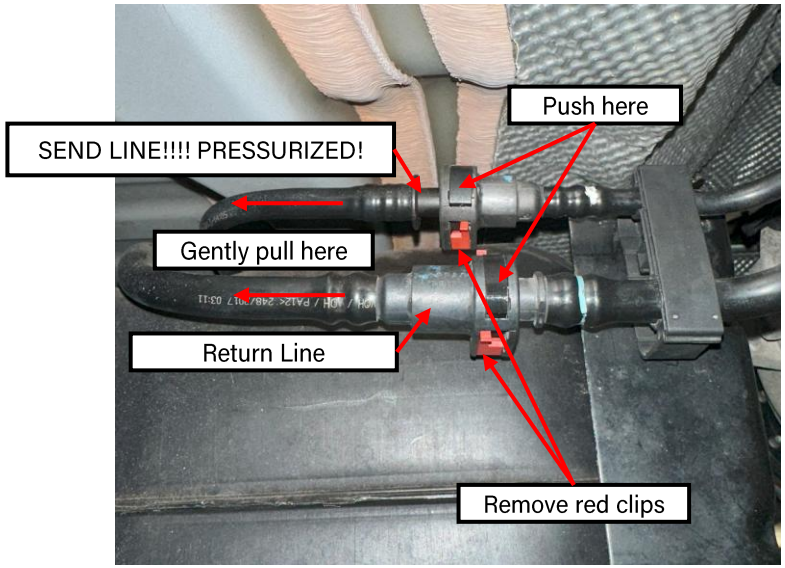

Figure 11: Send and return fuel lines

Note: RETAIN ALL PLASTIC FUEL CONNECTION CLIPS

INSTALLATION INSTRUCTIONS

10. Before fully dropping the tank, make sure that the tank is completely free of any remaining connections. Slowly drop the tank to gain visible clearance and ensure no hoses, plastic clips, or wires in the way. When the tank is fully dropped, Remove the OEM gas tank strap using a 13mm socket. **Remember, fuel is heavy and can easily tip the tank off your jack stands. Move slowly and carefully.**

When the tank is on the ground, note that there is a T-slot on the opposite side of the OEM skid. Lift the strap up, then push down to remove the strap completely.

Figure 12: OEM tank strap removal

INSTALLATION INSTRUCTIONS

11. Install the rear bracket bolt plate into the rear of the new tank skid. Line up the larger, 3/8″-16 bolts with the large open holes in the gas tank. Use the supplied 5/16″-18 countersunk bolt and hardware to tighten the rear bracket hanger into position. See the photos below. You will need a 3/16″ hex key and a 1/2″ socket/wrench to tighten the countersunk bolt.

Next, loosely tighten the provided 3/8″-16 locknuts, but **do not tighten yet.** Use a 7/16″ hex key and a 9/16″ socket/wrench, This is to allow some play in the bracket for when the new skid plate is brought into position for mounting.

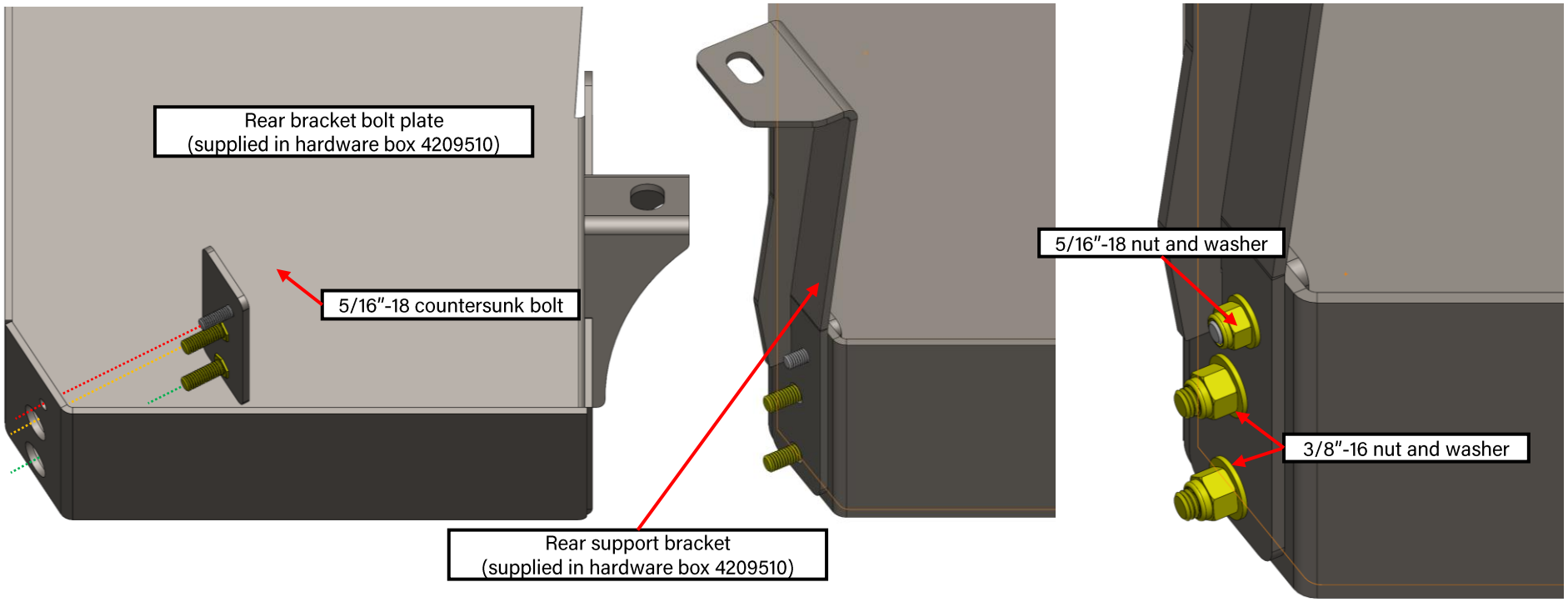

Figure 13: Loosely installing the rear support bracket

INSTALLATION INSTRUCTIONS

12. Prepare the new skid plate for the gas tank. Included in the hardware kit is a strip of sticky-sided foam tape. Apply the tape where the support member would make contact with the gas tank. Figure 14 shows where to apply this. Application of this tape is required to prevent the sharp, sheet-metal edges of the skid support member from rubbing into the plastic gas tank. This prevents damage long-term.

Place the skid support member with the flat, taped end in position across the new skid plate. Use one of the shorter 3/8-16" countersunk bolts (tighten with 7/16" hex key) to hold the support member in position. **With the help of another person**, place the gas tank into the new skid. The fit should be snug in the rear, with the support tower in the middle of the skid locking the skid in position.

Figure 14: Skid support member with gasket tape applied

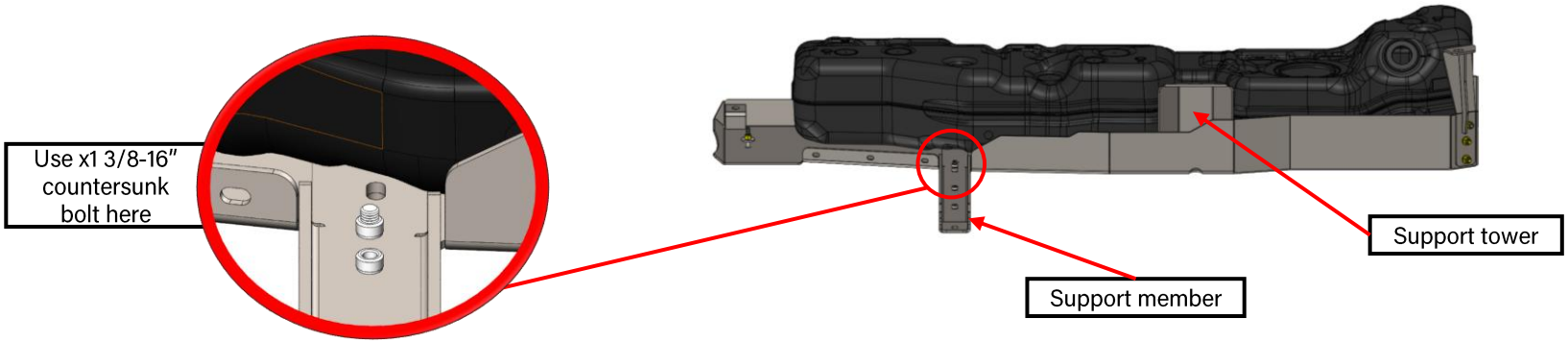

Figure 15: Gas tank installed into the skid plate with the support member underneath

INSTALLATION INSTRUCTIONS

13. **LONG ARM NOTE:** If you are installing the new gas tank skid plate on a vehicle with Clayton Off Road Rear Long Arm Brackets, note that you must remove of the Gas Tank Extension for the new skid plate **before installing the new skid plate onto the vehicle.** See photos below. Use a 3/16" hex key to remove the x6, 5/16" countersunk bolts from the threaded inserts. Figure 16 shows the Gas Tank Extension installed with the OEM short-arm control arm mount. Figure 17 shows the extension removed, the OEM short-arm control arm mount removed from the frame, and the Clayton Rear Long Arm Bracket installed.

If you are installing this gas tank skid plate on a vehicle with short-arm suspension, please leave the extension installed.

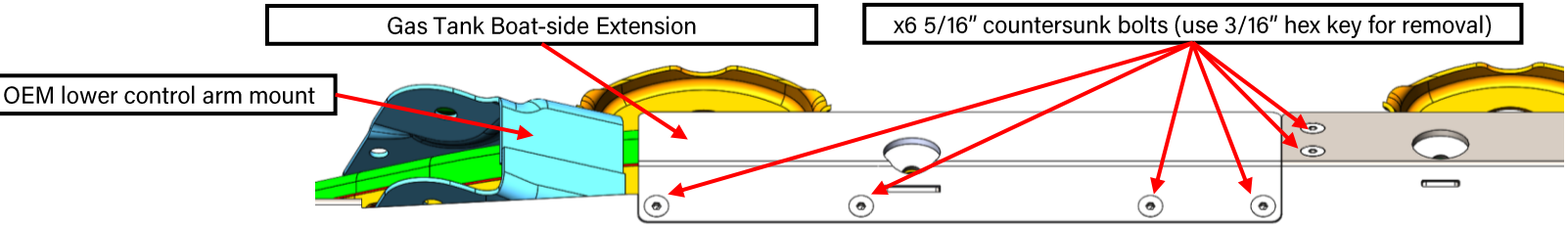

Figure 16: Boat-side Extension installed for a short-arm suspension setup using OEM lower control arm frame mounts

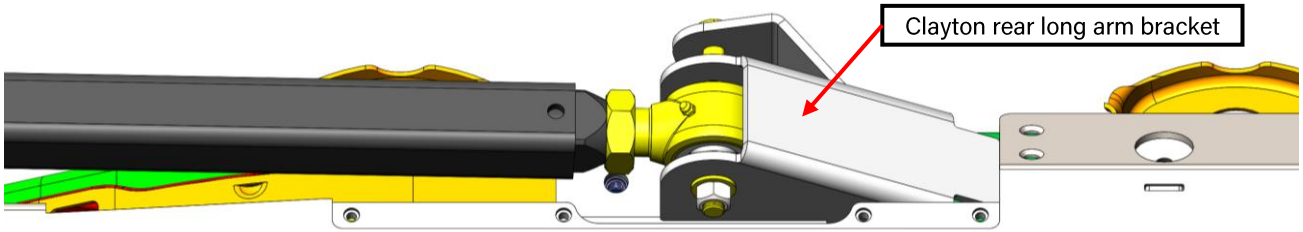

Figure 17: Boat-side Extension removed for a Clayton long-arm suspension setup using weld-on frame bracketry

INSTALLATION INSTRUCTIONS

14. Install the skid plate (with skid support member) onto the vehicle. **The use of 2 long-travel adjustable jack stands is highly recommended.** With the help of another person, lift the new skid plate and gas tank on top of the adjustable jack stands, and balance/center the tank. Keep one hand on the skid plate and slowly bring the tank up and into position by adjusting the jack stands.

Reinstalling the fuel lines first before bolting the tank into position is easiest. This requires the tank to remain stable for a brief period while the fuel lines are reconnected. One person should remain under the tank to stabilize it, while another person makes the necessary fuel line connections. Install the plastic clips at each fuel line at this time.

Bring the tank and new skid plate up into mounting position. Begin threading in the OEM frame bolts in the order shown in Figure 19 below. **Do not tighten the bolts. Start the threads 2-3 turns on each bolt so that you have plenty of wiggle room. Leave ALL bolts loose. If you cannot line up a bolt, remove the previous bolt completely and shift the skid plate to fit.**

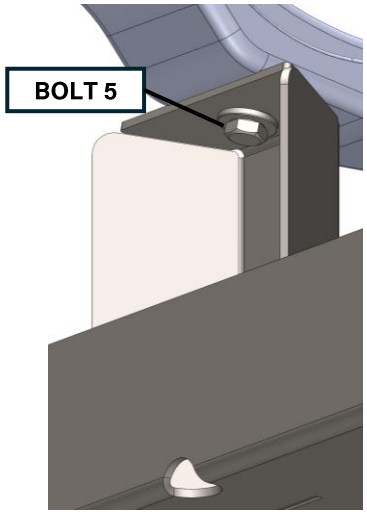

Figure 18: Bolt 5 location

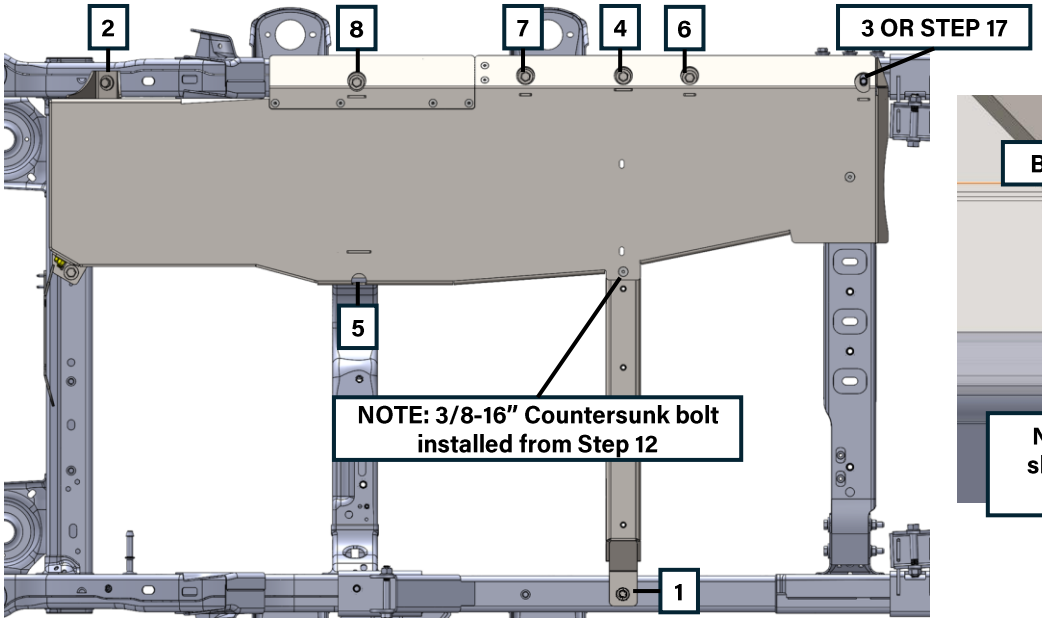

Figure 19: Recommended bolt installation order

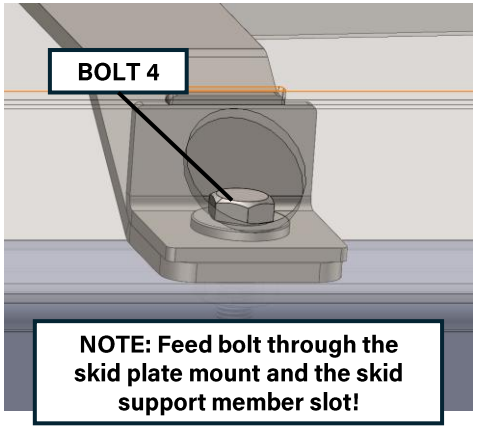

Figure 20: Bolt 4

INSTALLATION INSTRUCTIONS

15. Return to the front of the skid plate near the cross member. The remaining countersunk bolt hole is used to securely fasten the new skid plate to the OEM cross member. Follow the steps below.

Insert the longer 3/8″-16 countersunk bolt through the bottom of the skid plate at the countersunk hole. With your other hand, carefully drop the oversized 3/8″ washer over the bolt shank. **Note, the bolt will not thread into the internal nut-sert in the cross member, but rather feed through it.** Thread on the provided 3/8″-16 nylon nut, and tighten with a 9/16″ socket and 7/16″ hex key.

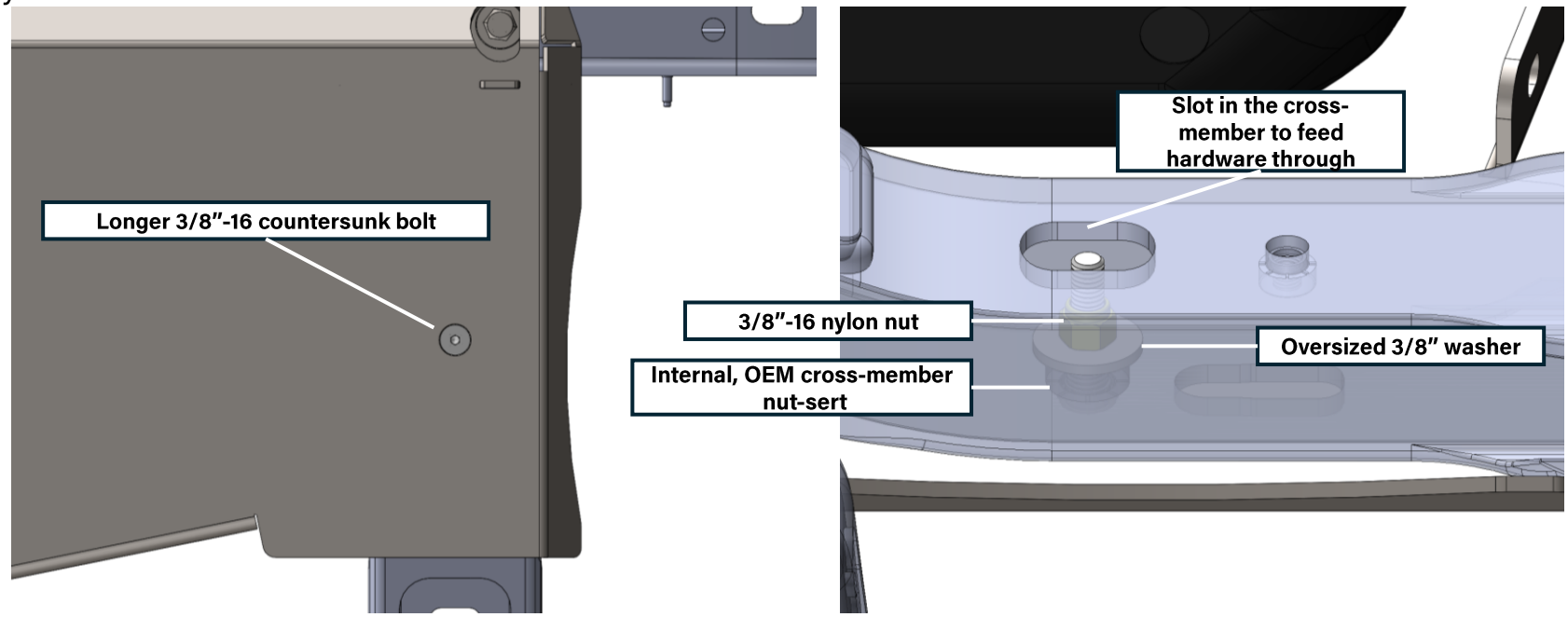

Figure 21: Front countersunk bolt and hardware installed

INSTALLATION INSTRUCTIONS

16. Tighten the rear gas tank support bracket into place using a 9/16″ wrench. Then, thread the OEM frame bolt (previously removed from Step 6, Bolt E) until tight. The smaller, 5/16″-18 locknut should already be tight (recall Step 11).

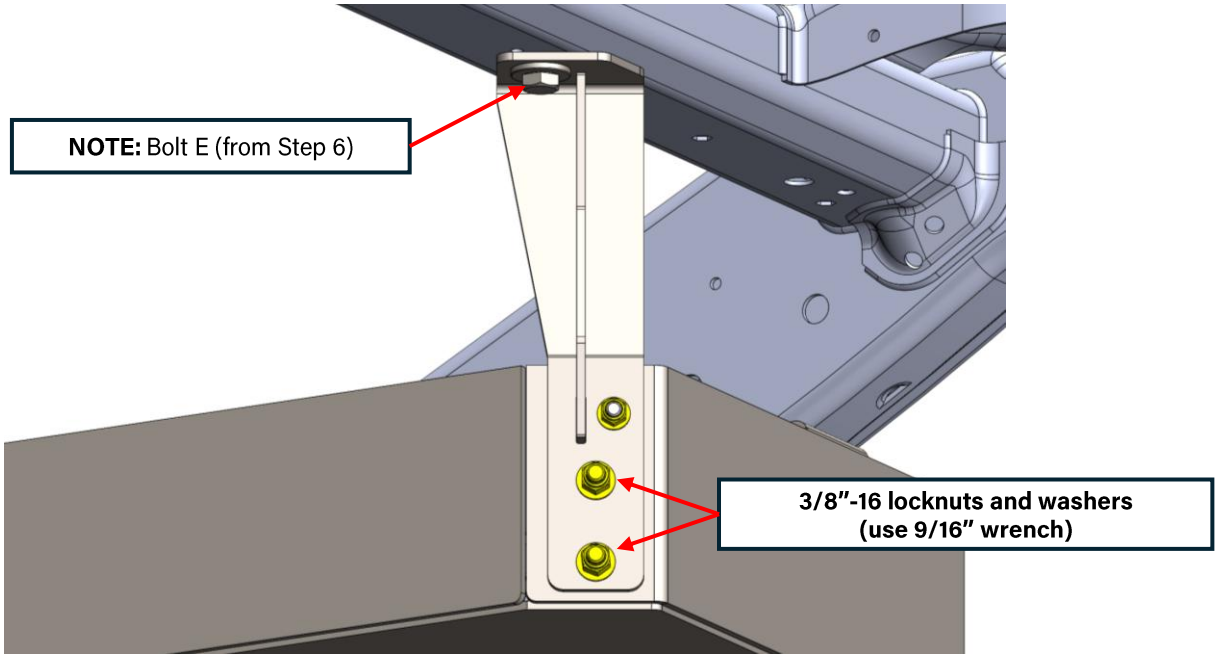

Figure 22: Rear gas tank support bracket installed

INSTALLATION INSTRUCTIONS

17. Note that, **depending on vehicle year and model, this threaded insert may be missing on your frame.** If this is the case, please use the flag nut-sert and a 1/2"-13 serrated bolt. Carefully feed the flag nut through the slot in the frame and feed the bolt through. See photos below for reference. Use a 3/4" socket to tighten the bolt.

If your vehicle has the OEM threaded insert at this location, use the OEM bolt removed from Step 2.

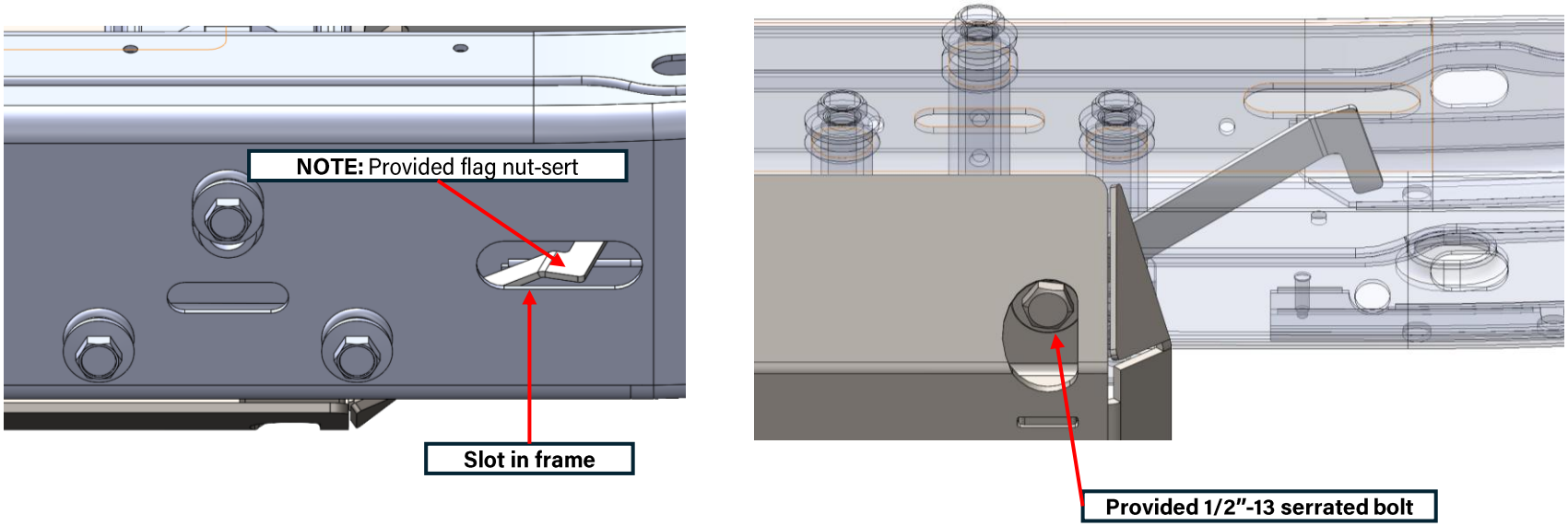

Figure 23: Front of tank threaded insert location

INSTALLATION INSTRUCTIONS

18. At this point, the new gas tank skid plate is fully installed. Please proceed to the next step for the transfer case skid plate installation.

Figure 24: Gas tank skid plate fully installed

INSTALLATION INSTRUCTIONS

19. Install the 3 cross-member components (COR-4209900) into the OEM cross-member. Slide the inserts into the three rectangular slots in the cross member. See the figures below. Note that the inserts do not cover the cutouts completely. This is to allow for the adjustment of misalignment when getting the bolts started. **Install all three cross-member components at this time.**

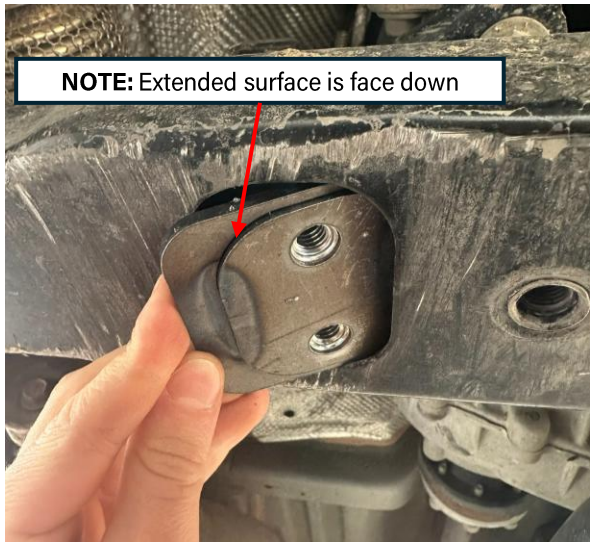

Figure 25: Installing cross-member components (Steel cross member)

Figure 26: Installing cross-member components (Aluminum cross member)

INSTALLATION INSTRUCTIONS

20. **OPTIONAL STEP:** Install the "CLAYTON" logo backing plate using a 3/16" hex key. Use the short 5/16"-18 countersunk bolts found in the 4209310 hardware box. If you choose to color-match the logo backdrop, paint the backing plate and let it dry, then reinstall. You will be able to reinstall the backing plate when the skid plate is fully installed. The backing plate can be found in hardware box 4209310 – Transfer Case Skid Plate Hardware.

Figure 27: "CLAYTON" Logo backing plate installed (unpainted)

INSTALLATION INSTRUCTIONS

21. Bring the new transfer case skid plate into position. Loosely thread the frame bolt removed from Step 2 followed by the x3 provided 3/8"-16 countersunk bolts at the cross member, as well as the x4 3/8"-16 countersunk bolts at the skid support member.

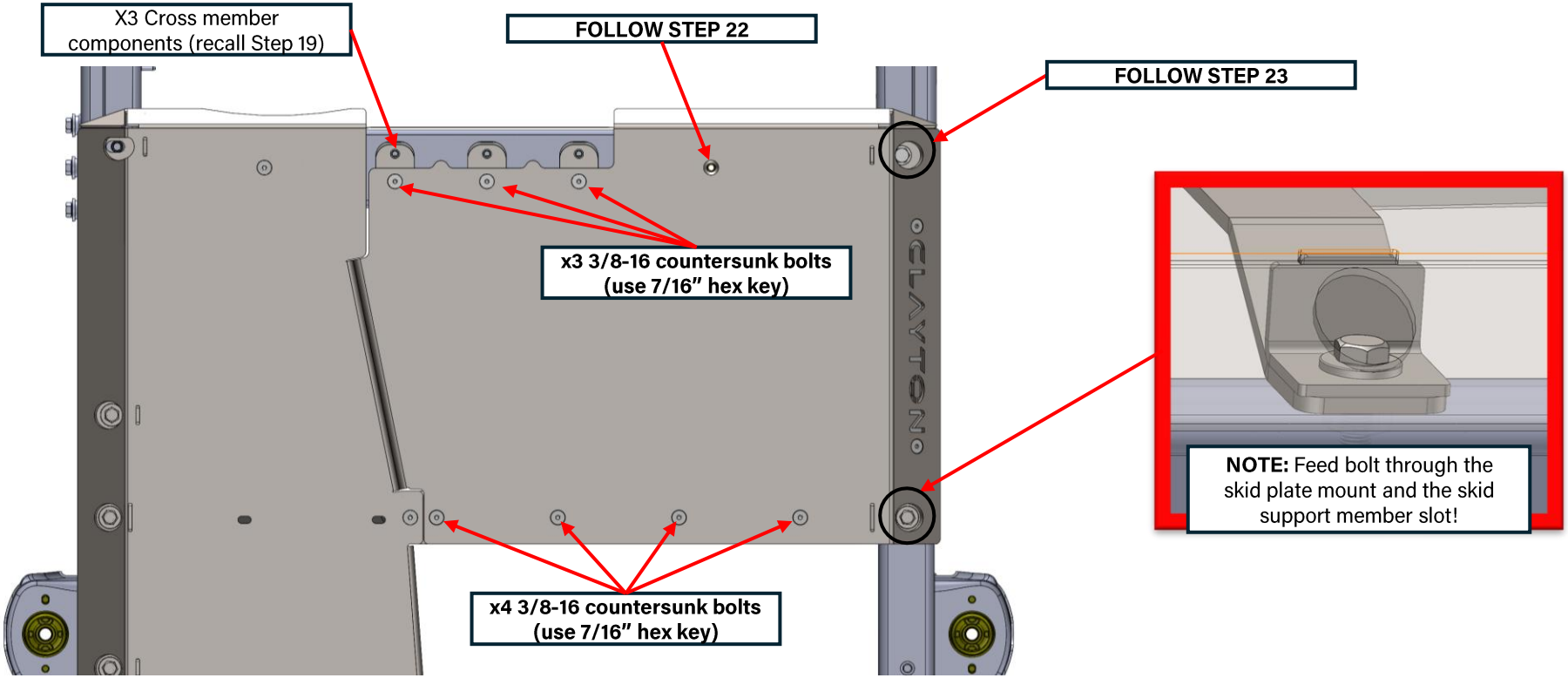

Figure 28: Countersunk hardware locations to be installed, and OEM frame rail bolt reinstalled

INSTALLATION INSTRUCTIONS

22. Insert the longer 3/8″-16 countersunk bolt through the bottom of the skid plate at the countersunk hole. With your other hand, carefully drop the oversized washer over the bolt shank through the access slot (See Step 4). **Note, the bolt will not thread into the internal nut-sert in the cross member, but rather feed through it.** Thread on the provided 3/8″-16 nylon nut, and tighten with a 9/16″ socket and 7/16″ hex key.

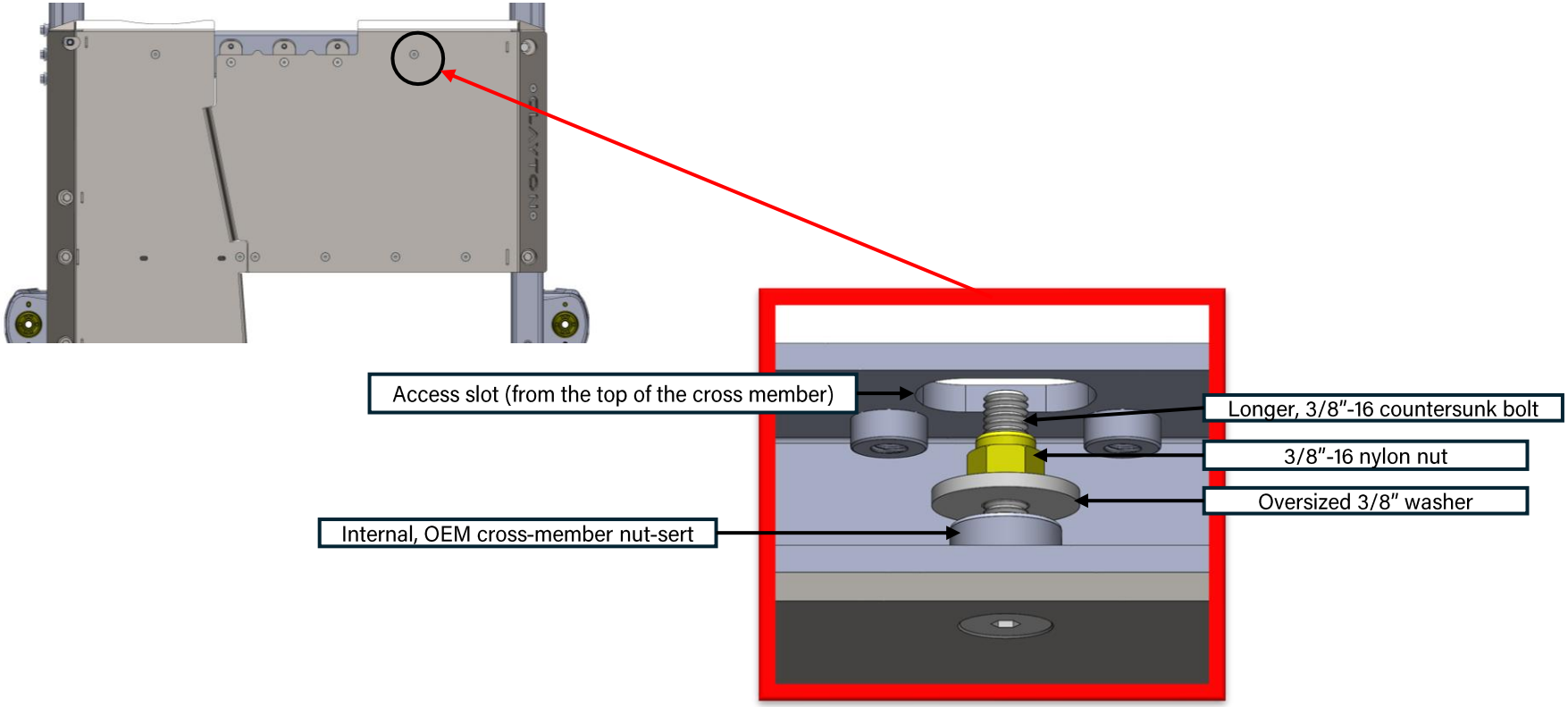

Figure 29: Cross-section view of OEM crossmember thru-bolt with large washer and nylon nut installed

INSTALLATION INSTRUCTIONS

23. Use a 17/32" drill bit and drill a hole in the frame marked below. Try to locate the drill perfectly concentric with the curved part of the slot. See the photos below for reference. **You may choose to drill a pilot hole first using a 3/16" drill bit**. When the hole is drilled, ream/clean out the hole with a couple of passes. Then, use the provided flag nutsert along with 1/2"-13 serrated bolt to tighten. Feed the flagnut into the slot on the frame, and then line up the bolt up through the mount and through the drilled hole. Use a ¾" socket to tighten.

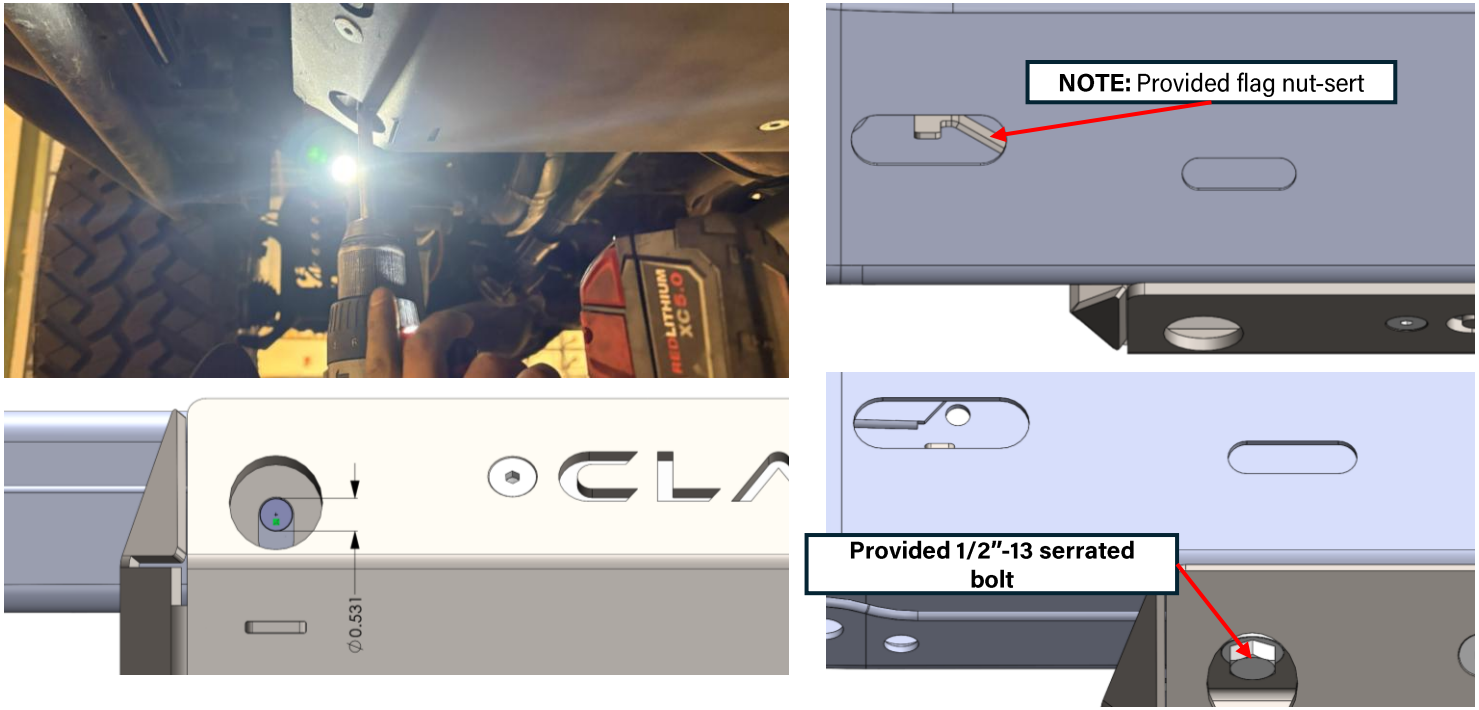

Figure 30: Drilling 17/32" frame rail hole for the provided ½"-13 serrated bolt and flagnut

NOTE: A more common, 1/2" sized drill bit is also acceptable; the bolt hole will be much tighter. 17/32" is the standard free-fit size for the provided ½" bolt.

INSTALLATION INSTRUCTIONS

24. Use the x3 provided 3/8"-16 bolts, washers, and nylon nuts to fasten the gas tank skid plate and transfer case skid plate together. The seam is located on the inside of the skid plate, closest to the cross member and the front of the gas tank. This seam is easiest accessible from the back of the skid plate near the rear driveshaft. Use a 9/16" wrench/socket. Tighten all 3 bolts.

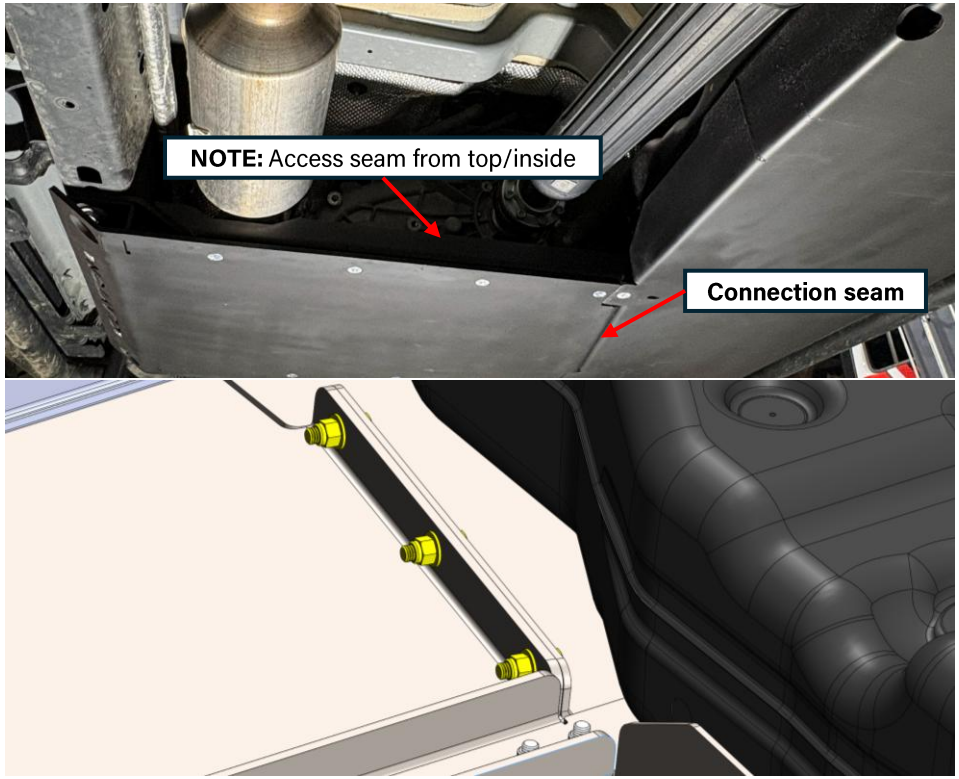

Figure 31: Connection seam to be bolted together using x3 3/8"-16 bolts

TIP: If you cannot feed the bolts through at the slotted seam, place a jack/bottle jack at the start of the bend to "prop" the holes into position. Slowly adjust the jackstand until you can feed the bolts through.

INSTALLATION INSTRUCTIONS

25. Reinstall the exhaust hanger bolts on the top of the cross member at this time. Use a 13mm socket or a short ratchet wrench. Tighten them down at this time.

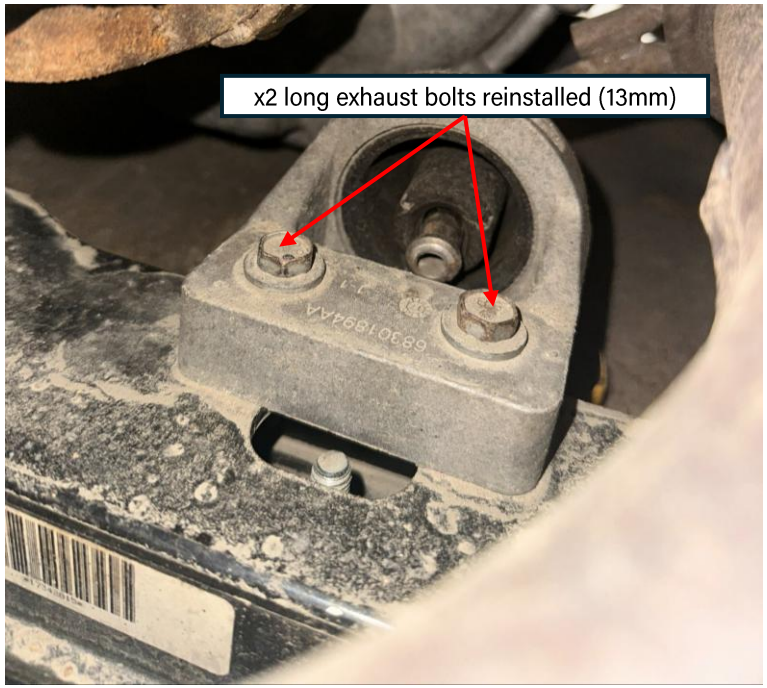

Figure 32: Reinstalled exhaust hanger

TIP: Clearance is tight when reinstalling these bolts. It is best to reach up above the cross-over exhaust pipe to then reinstall the bolts.

INSTALLATION INSTRUCTIONS

26. At this point, the new transfer case skid plate is fully installed. Please proceed to the next step for the engine skid plate installation.

Figure 33: Transfer case skid plate fully installed

INSTALLATION INSTRUCTIONS

27. Replace the bolt at the driver side motor mount shown below. Use the provided M10x40mm bolt and washer. Use a 13mm socket to remove the old bolt at the mount. The bolt can be accessed through the inner fender well, above the frame. Pull the fender lining back slightly to access the top of the mount. Use a 17mm wrench/socket to tighten the new M10 bolt. **Tighten the bolt completely. Replacing this bolt is necessary because the longer stud is needed to tighten the bracket down completely.**

NOTE: Remove OEM bolt (13mm socket/wrench)

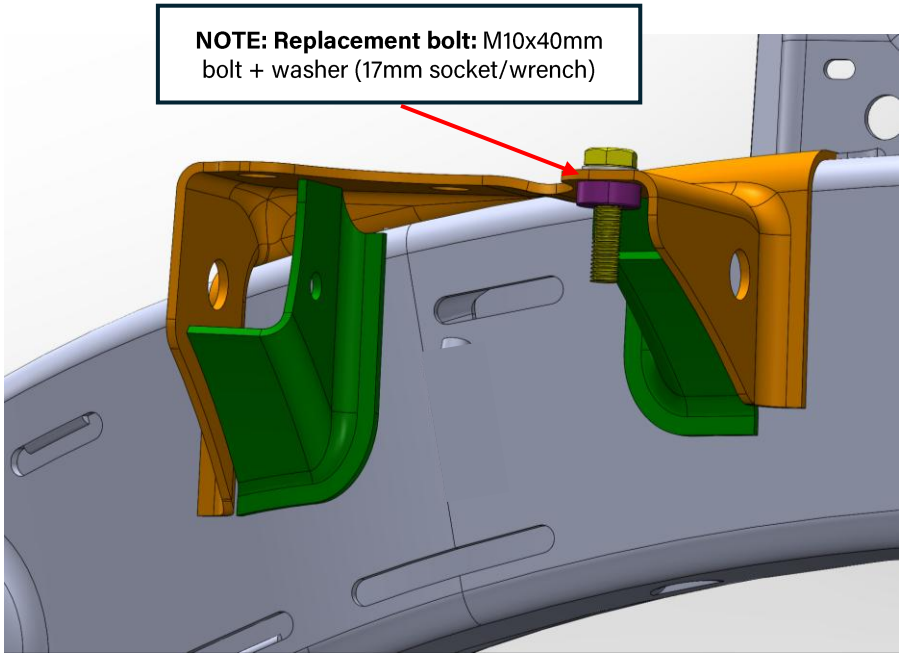

Figure 34: Motor mount old/new bolts with CAD visual showing bolt swap

INSTALLATION INSTRUCTIONS

28. **Loosely** install the provided driver-side motor mount bracket. This bracket has a clearance bend for the driveshaft. See Figure 35 below for clarification. **Install below the motor mount using the provided M10 locknut and washer. Do not install the skid plate yet!**

DO NOT TIGHTEN YET. MINOR ADJUSTMENTS WILL BE NEEDED FOR FINAL FITMENT!

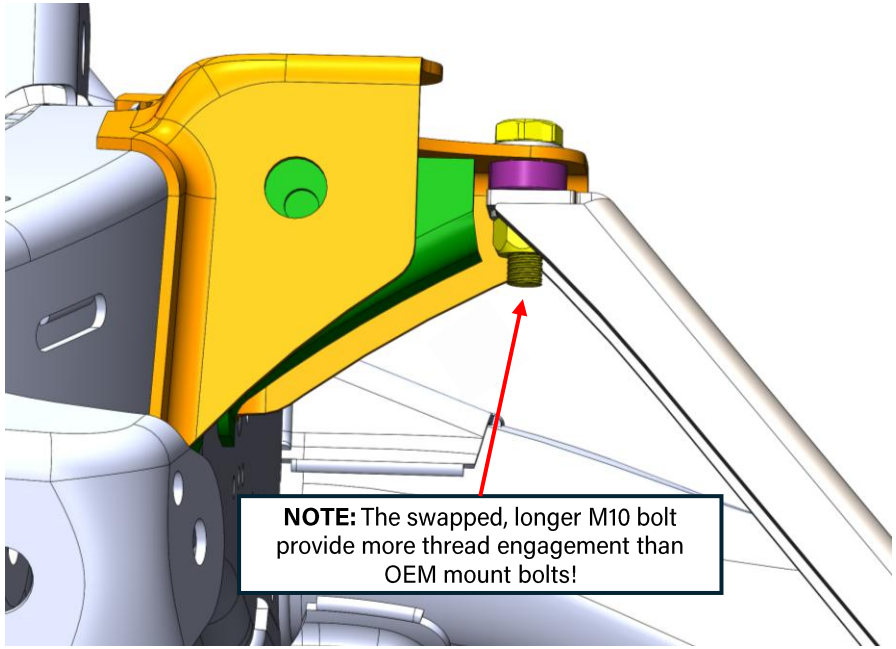

Figure 35: Motor mount bracket loosely installed

INSTALLATION INSTRUCTIONS

29. Replace the bolt at the passenger side motor mount shown below. Use the provided M10x40mm bolt and washer. Use a 13mm socket to remove the old bolt at the mount. The bolt is accessible through the inner fender well, above the frame. Pull the fender lining back slightly to access the top of the mount. Use a 17mm wrench/socket to tighten the new M10 bolt. **Tighten the bolt completely. Replacing the bolt is necessary because the longer stud is needed to tighten the bracket down completely.**

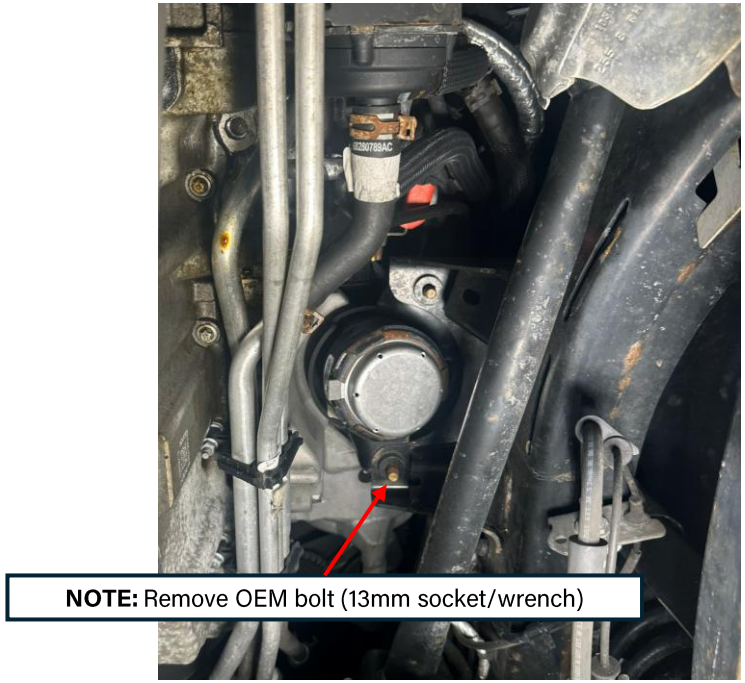

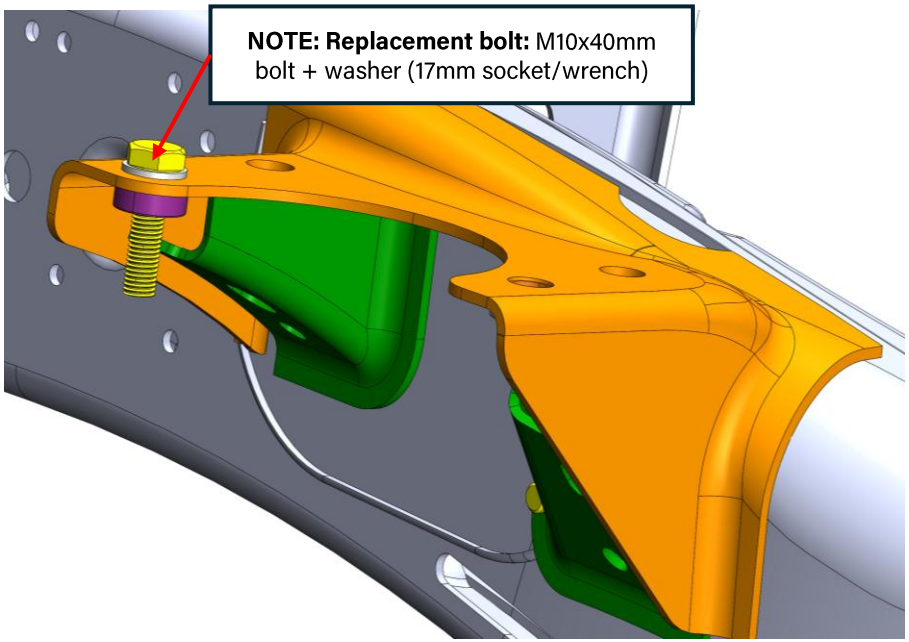

Figure 36: Motor mount old/new bolts with CAD visual showing bolt swap

INSTALLATION INSTRUCTIONS

30. **Loosely** install the provided passenger-side motor mount bracket using a 17mm socket. See Figure 37 below for clarification. **Install below the motor mount using the provided M10 locknut and washer. Do not install the skid plate yet!**

DO NOT TIGHTEN YET. MINOR ADJUSTMENTS WILL BE NEEDED FOR FINAL FITMENT!

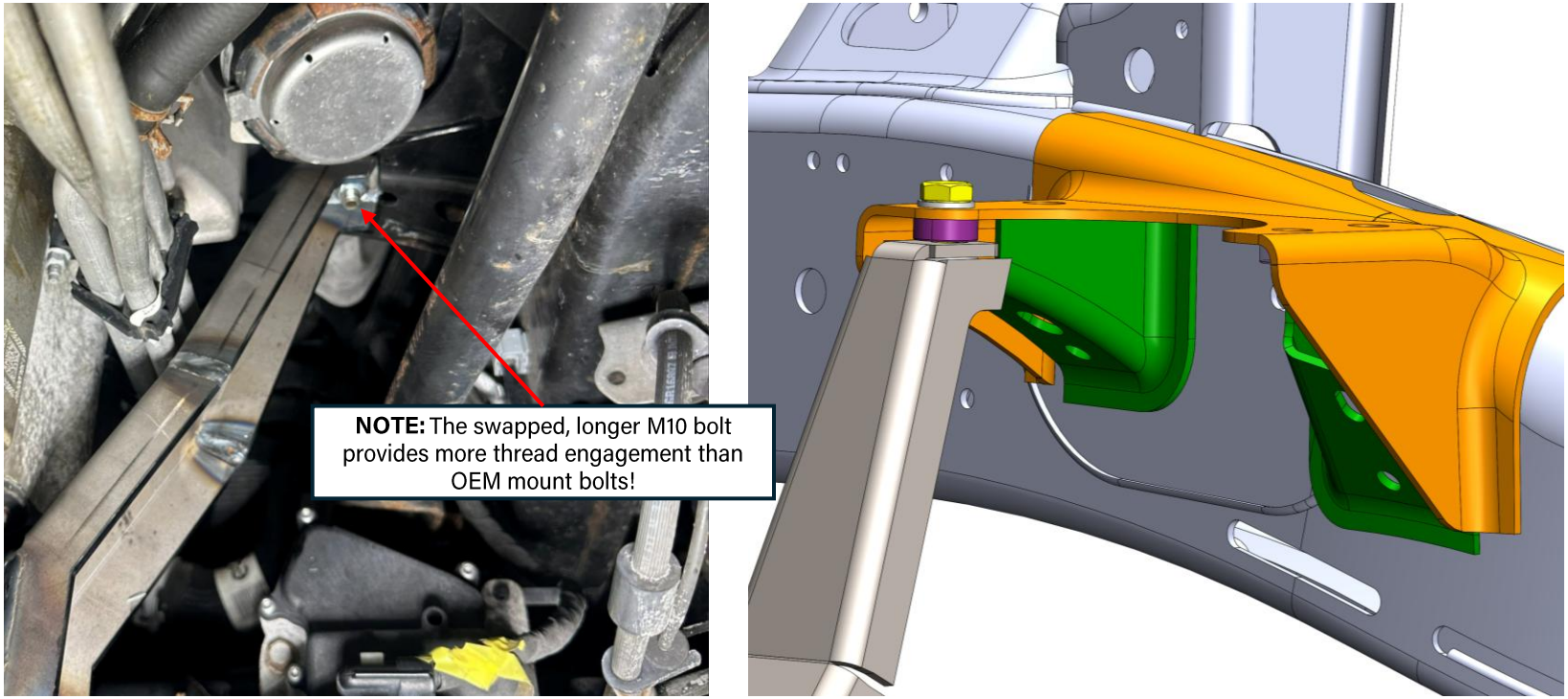

Figure 37: Motor mount bracket loosely installed

INSTALLATION INSTRUCTIONS

31. With both engine skid plate brackets **loosely** installed, lift the main skid plate into position. This is easiest accomplished with a friend or with the help of a tall, adjustable jack stand. **Loosely** thread x3 of the provided 3/8"-16 countersunk bolts into the PEM cross member components (From Step 19) in the cross member. **Support the front end of the skid plate while doing this.**

Continue to support the front end of the skid plate at this time. **Note that the front set of holes in the cross member components are intended for the engine skid plate, while the back set of holes are fastening locations intended for the Transfer Case Skid plate (sold separately).**

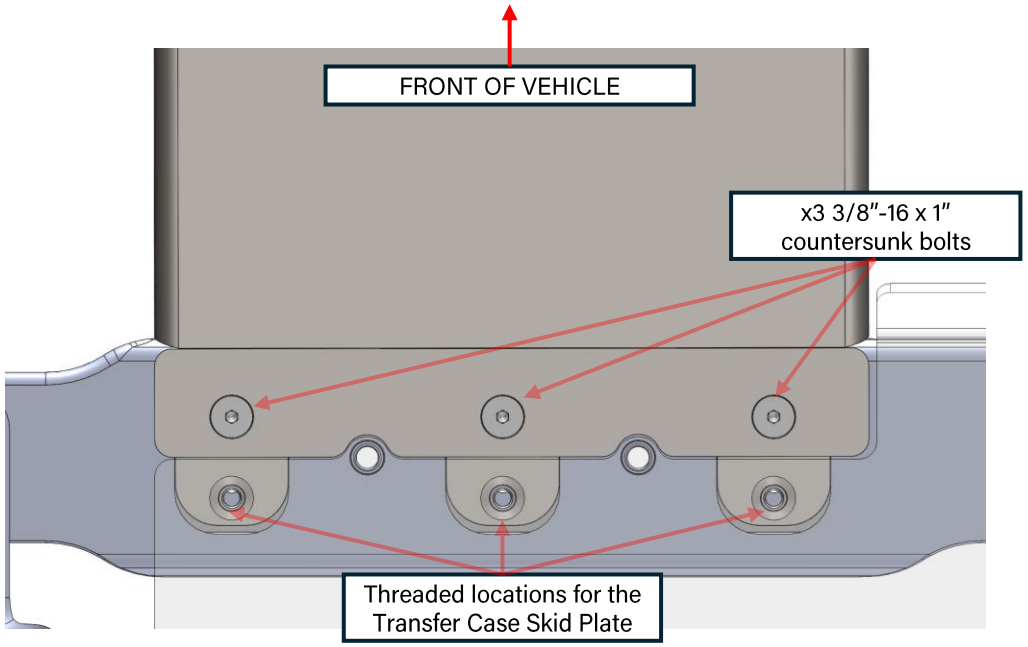

Figure 38: New skid plate installed at OEM cross member with supplied cross member components

INSTALLATION INSTRUCTIONS

32. Move to the front of the skid plate to install the remaining hardware. Install the x4 longer 3/8"-16 bolts through the holes on the engine skid plate brackets and feed them through the skid plate. **Use x2 washers for each bolt** as seen below in Figure 39. **Loosely** fasten the bolts on the inside of the skid plate with the provided lock nuts.

If you are having trouble lining up the bolts, go back to the other hardware and make sure that everything is completely **loose.** This will greatly ease the installation process.

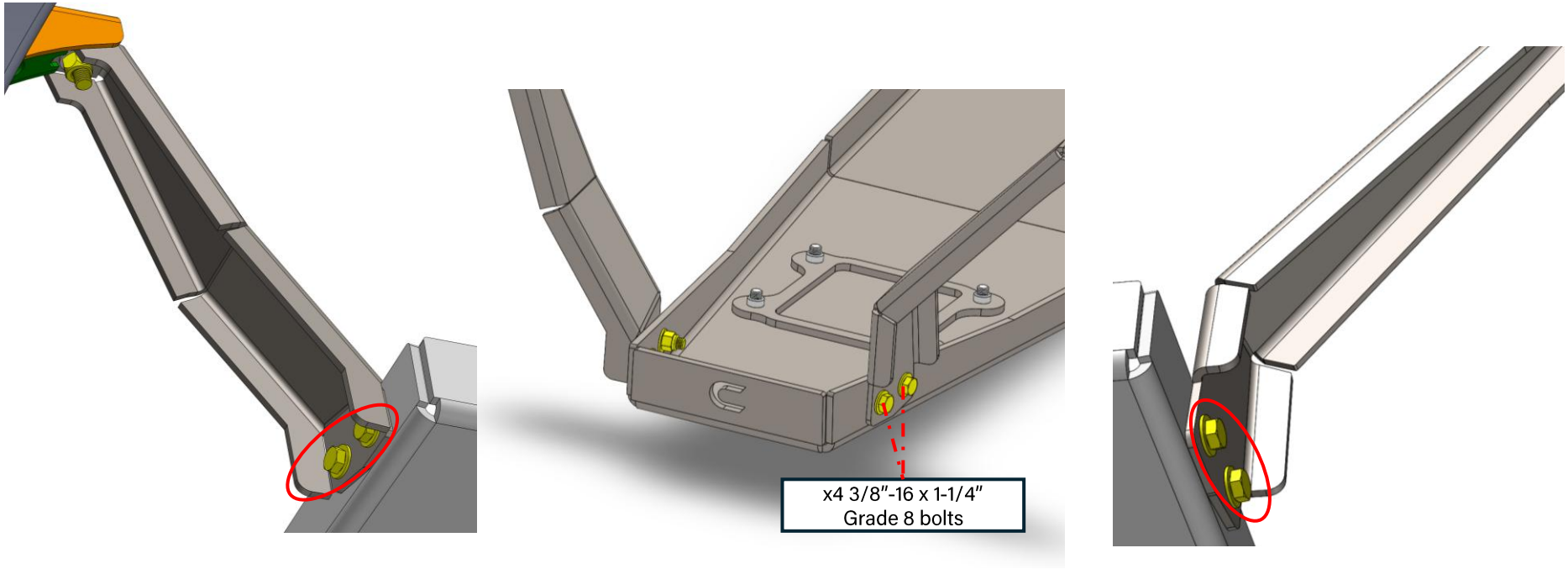

Figure 39: New skid plate installed at OEM 2.0L motor mount locations and skid plate connections

INSTALLATION INSTRUCTIONS

33. **OIL CHANGE NOTE:** Use a 7/16" hex key to remove the x4 3/8"-16 countersunk bolts. Push up on the bottom of the drop-out to move it out of the way. The opening in the skid plate is designed to be large enough to allow full drainage of the oil pan.

When the oil is completely drained, reinstall the oil pan plug and the drop-out plate. Tighten hardware.

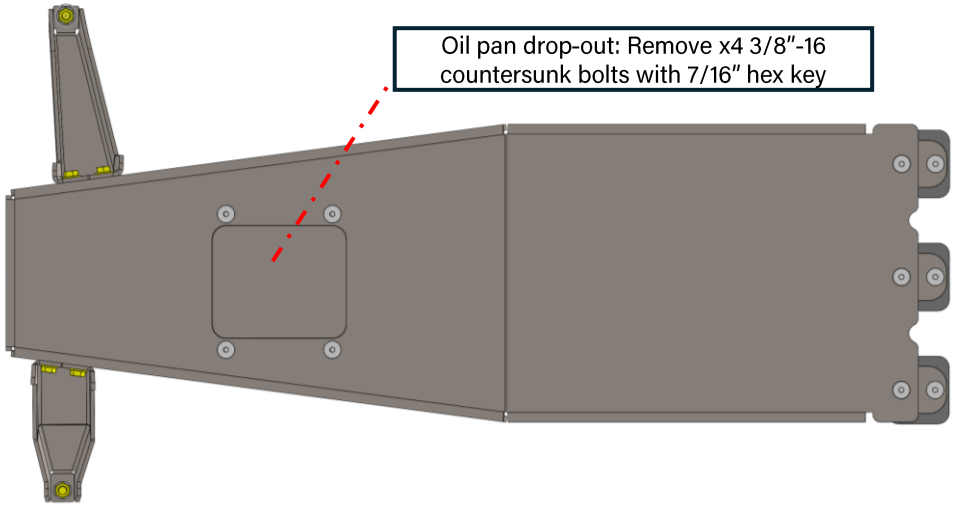

Figure 40: Oil pan drop-out for oil changes and service

INSTALLATION INSTRUCTIONS

34. At this point, the engine skid plate is fully installed. You may now proceed to the following steps to wrap up the entire installation with torque specifications for each bolt removed and provided.

Figure 41: Engine skid plate fully installed

INSTALLATION INSTRUCTIONS

35. With all the hardware in place, you may now begin tightening. Starting at the gas tank skid plate, refer to Table 1 below to ensure that all the hardware used in the system is tightened to specification.

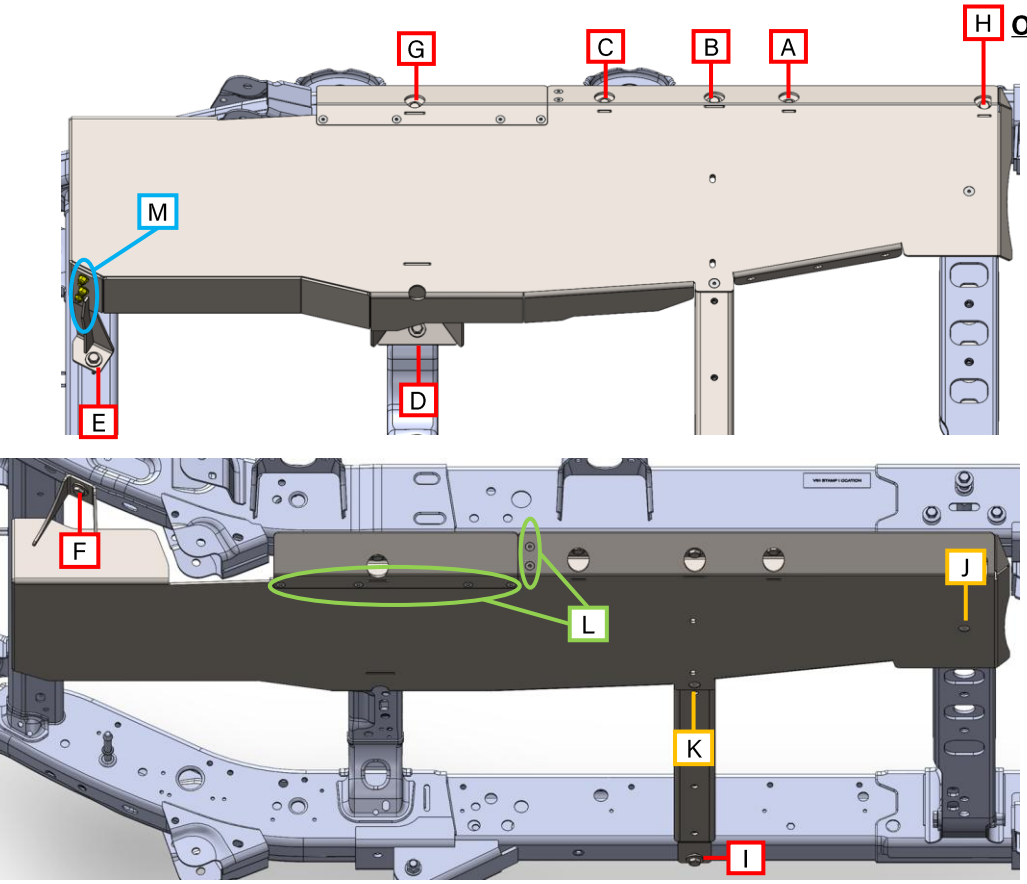

NOTE: Bolt H may be replaced with bolt R if the threaded insert in the frame is missing. See Step 17.

Figure 42: bolt callouts on both sides of the gas tank skid plate

Table 1: Torquing procedure for gas tank skid plate hardware

BOLT ID	QTY.	DESCRIPTION	TORQUE (ft-lb)	TOOL SIZE
A-I	9	OEM frame bolts	48	18mm
J	1	3/8”-16 x 2” Countersunk bolt and nut	25	9/16” + 7/16” hex
K	1	3/8”-16 x 1” Countersunk bolt	25	7/16” hex
L	6	5/16”-18 x 0.625 Countersunk bolts	20	3/16” hex
M	2	3/8”-16 stud bolts and nuts	40	9/16”
R	1	1/2”-13 x 1.5” Serrated bolt	75	3/4”

INSTALLATION INSTRUCTIONS

36. Proceed with Table 2 while referencing Figure 43. Tighten the transfer case skid plate hardware to the following specification. **Pay attention to the * notes at the bottom of the page.**

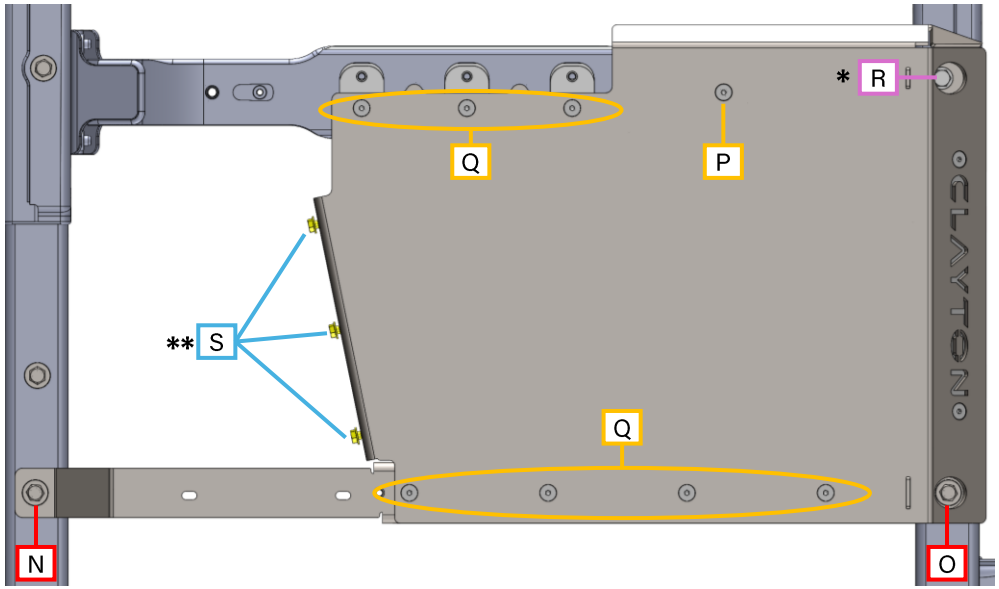

Figure 43 : bolt callouts on transfer case skid plate

Table 2: Torquing procedure for transfer case skid plate hardware

BOLT ID	QTY.	DESCRIPTION	TORQUE (ft-lb)	TOOL SIZE
N,O	2	OEM frame bolts	48	18mm
P	1	3/8”-16 x 2” Countersunk bolt and nut	25	9/16” + 7/16” hex
Q	7	3/8”-16 x 1” Countersunk bolt	25	7/16” hex
R	1	1/2”-13 x 1.5” Serrated bolt	75	3/4”
S	3	3/8”-16 x 1-1/4” hex bolt	40	9/16”

*** NOTE:** Bolt R is used at the drilled hole location from Step 23

**** NOTE:** Bolts S will only be used when joining the transfer case skid plate and gas tank skid plate together

INSTALLATION INSTRUCTIONS

37. Proceed with Table 3 while referencing Figure 44. Tighten the engine skid plate hardware to the following specification. **Pay attention to the * notes at the bottom of the page.**

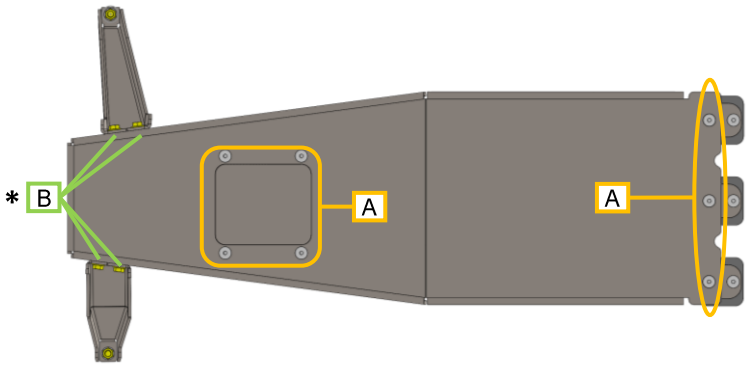

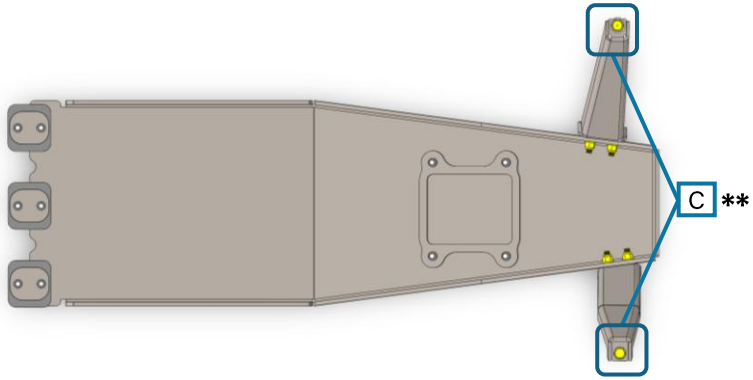

Figure 44: bolt callouts on engine skid plate

Table 3: Torquing procedure for engine skid plate hardware

BOLT ID	QTY.	DESCRIPTION	TORQUE (ft-lb)	TOOL SIZE
A	7	3/8”-16 x 1” Countersunk bolts	25	7/16” hex
B	4	3/8”-16 x 1-1/4” hex bolts + nuts	40	9/16”
C	2	M10-1.5 x 40mm hex bolts + nuts	50	17mm

*** NOTE:** Bolts B will need to be tightened from the inside of the engine skid plate. Temporary removal of the oil pan drop-out will allow for internal access.

**** NOTE:** Bolts C must be tightened and bottomed out on the OEM motor mount first, before the brackets are installed. See Steps 27 and 29.

INSTALLATION INSTRUCTIONS

38. The torquing procedure is now complete, and the installation is finished. Please retorque bolts after 500 miles of driving.

Be sure to inspect your skid plate system regularly. Skid plates are engineered to withstand harsh off-road use and to protect critical vehicle components; however, they are designed as sacrificial components. Severe impacts or sustained abuse can still result in cosmetic or structural damage. Regular inspection ensures continued protection and proper function, letting you hit the trails protected and insured.

Figure 45: System fully installed